M100002321.SchDoc

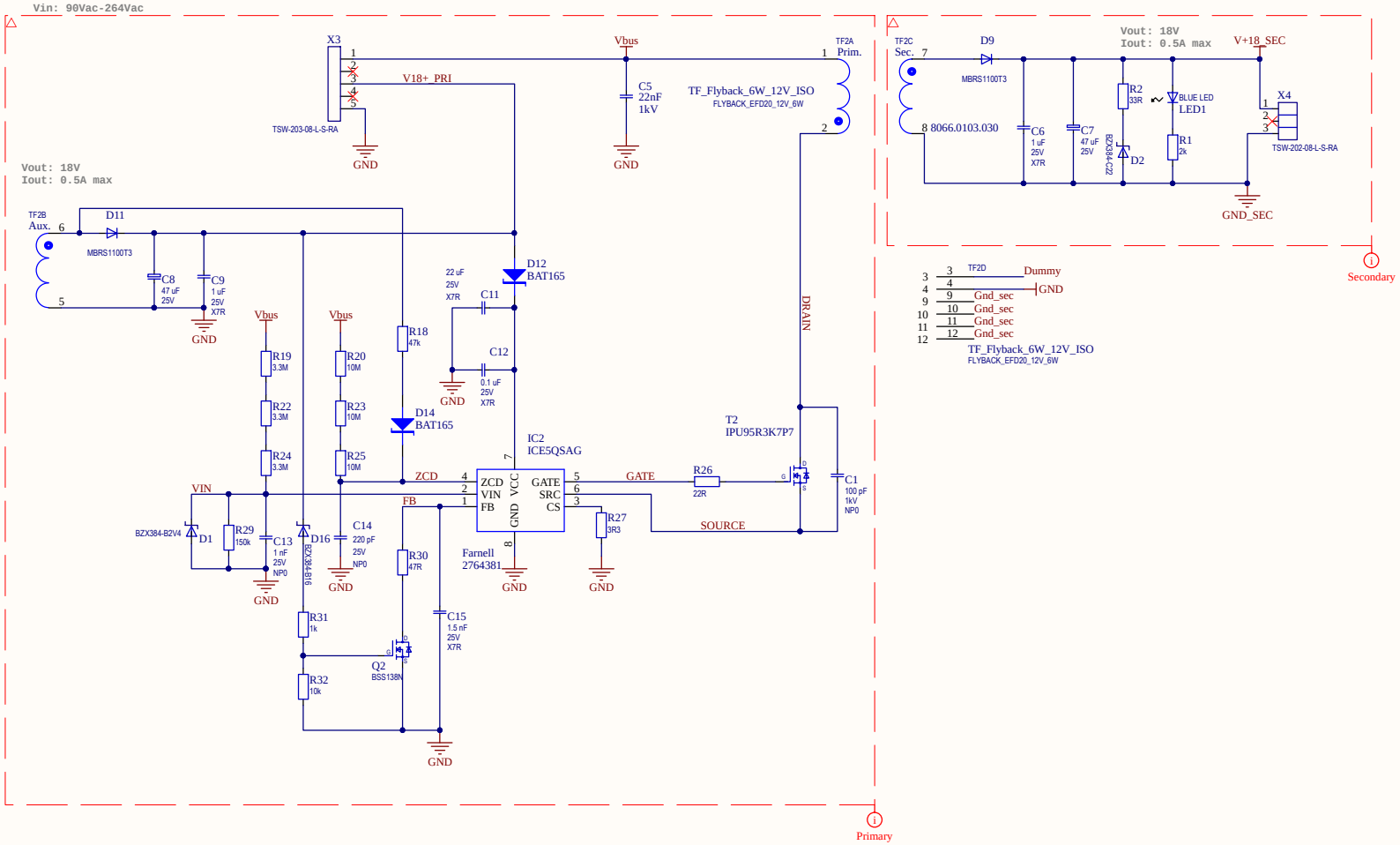

Title			
Variant	[No Variations]	Approved	<Appr.>
Size: A3	Document Name: M100002321.SchDoc	Rel.	Rev.
Author:			
Date: 04.11.2019 Time: 11:03:19	SVN Revision: Unknown revision	Sheet	of